FUP450
Spare parts catalogue

Duun Industrier as
7630 Åsen, Norway
www.duun.no

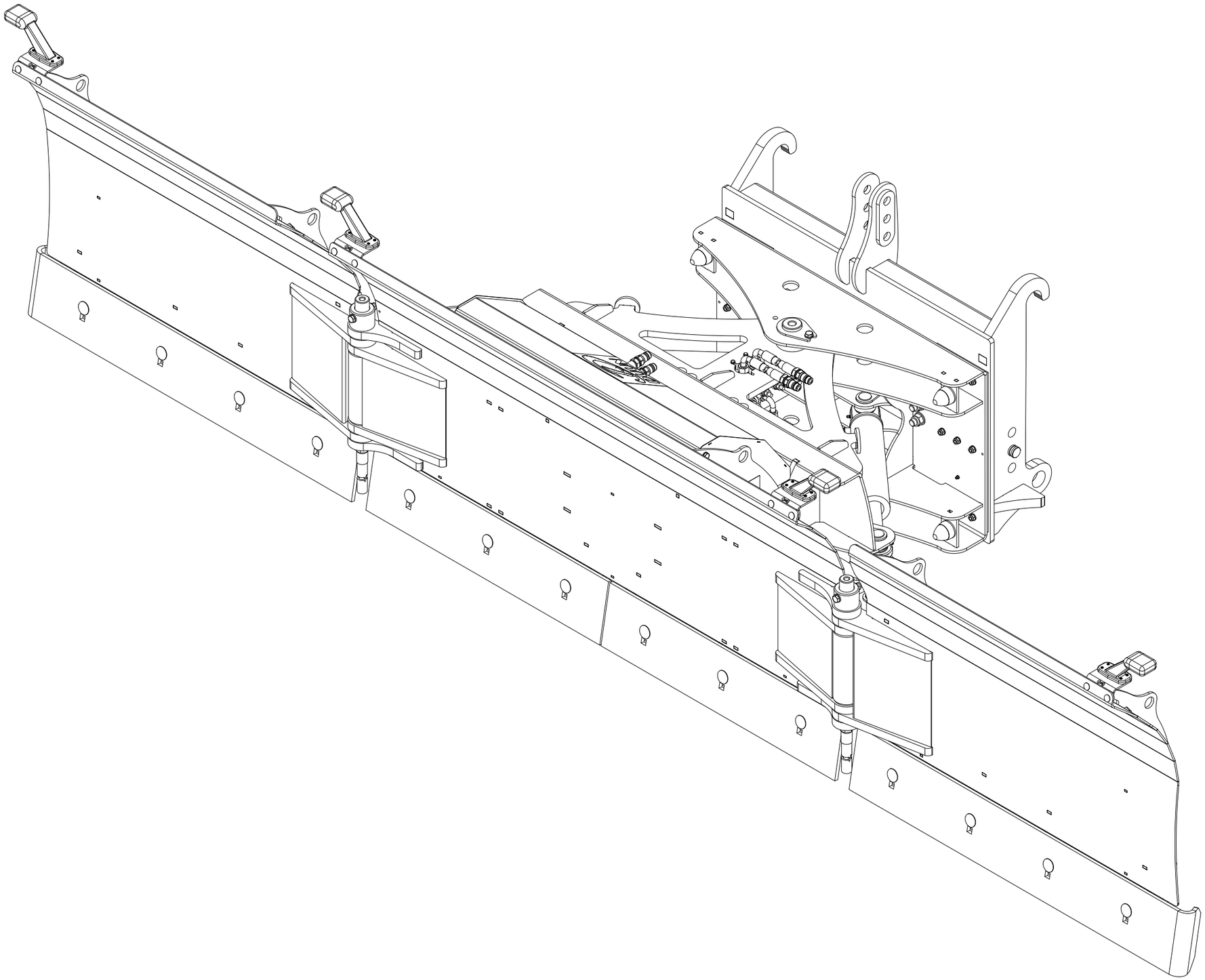

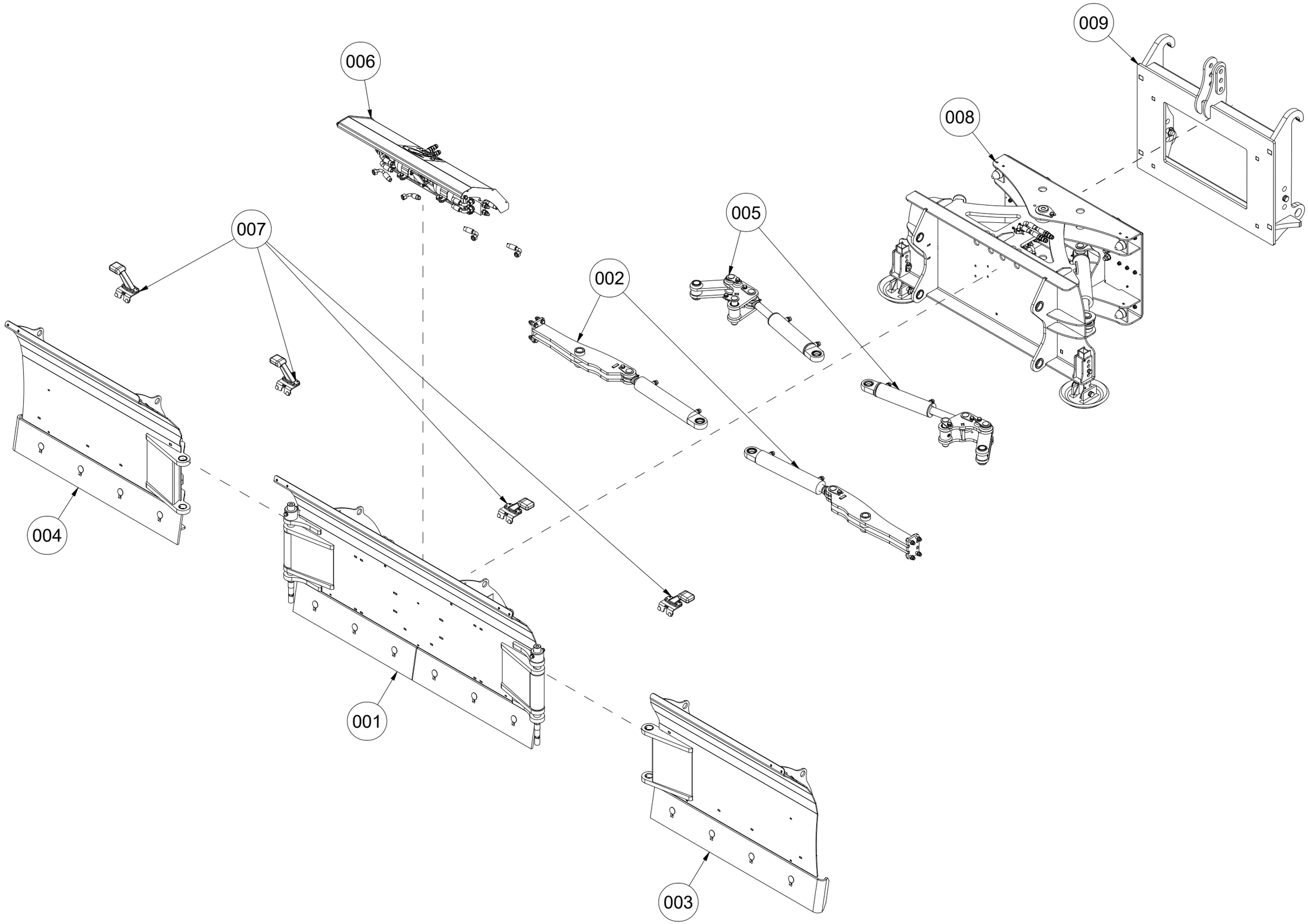
006
009
008
007
005
002
004
001
003

001 The Main blade FUP450

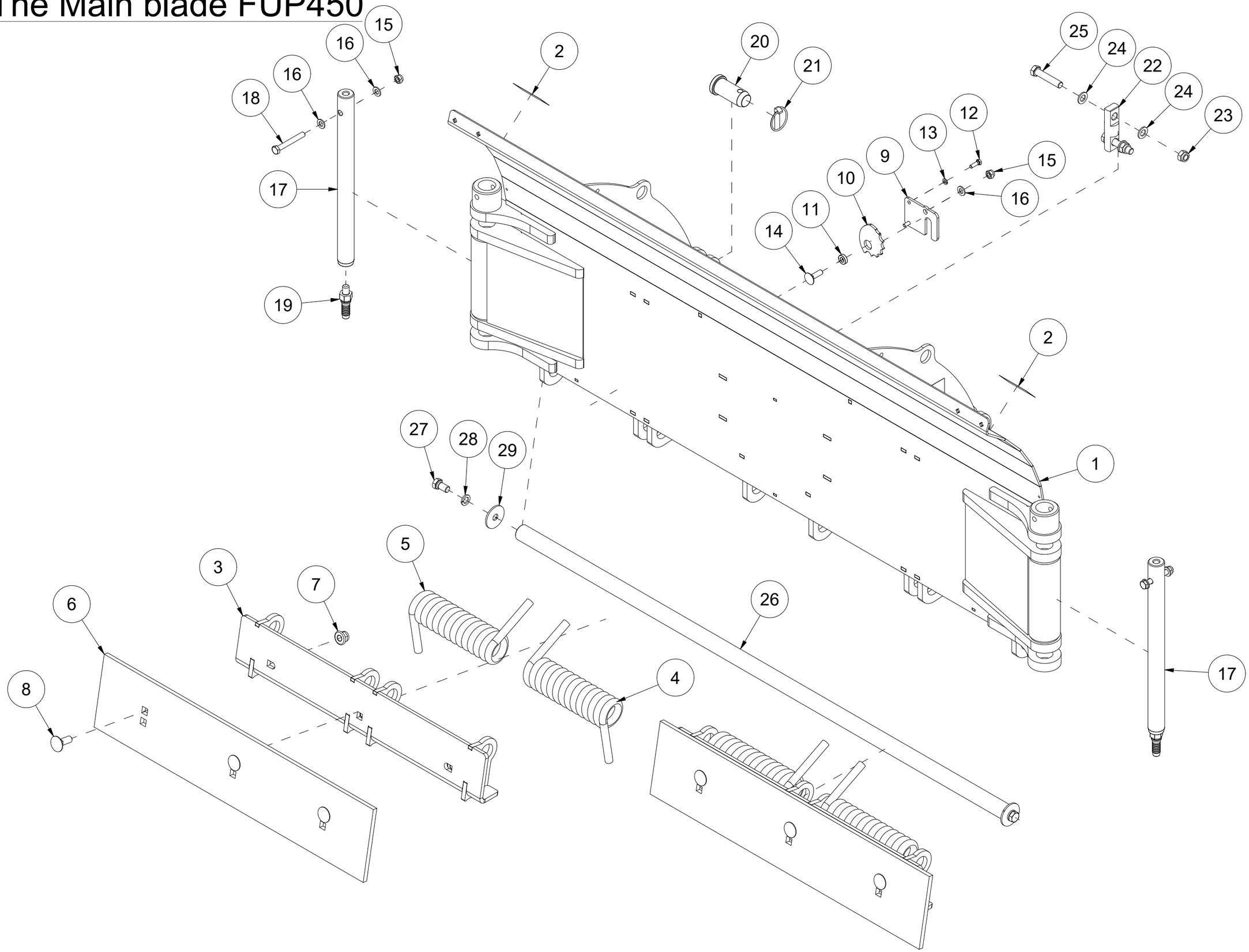

Pos	Qty	Article no	Designation
1	1	24101001	Middle blade
2	2	2935088	Adhesive label 90x48 Hand pinch hazard
3	2	24101004	Middle wear steel beam
4	2	24101058	Spring for shear trigger Ø19 VV
5	2	24101059	Spring for shear trigger Ø19 HV
6	2	2112226	Flat wear steel 12x200x915
7	6	2489175	Locking nut with flange M16 ElZn DIN 6926
8	6	2343494	Locking screw M16x45 ElZn 8.8 DIN 603
9	4	24101027	Lid for spring tensioner
10	4	24101028	Spring tensioner
11	4	24101029	Sleeve/bearing
12	8	2422246	Hexagon screw M8x25 ElZn 8.8 DIN 933
13	8	2534047	Spring washer M8 ElZn DIN 127
14	4	2344352	Locking screw M12x40 ElZn 8.8 DIN 603
15	6	2483611	Locking nut M12 ElZn DIN 985
16	8	2531069	Washer M12 ElZn DIN 125
17	2	24101032	Hinge bolt Ø35
18	2	2422364	Hexagon screw M12x90 ElZn 8.8 DIN 931
19	2	24101055	Scraper
20	4	24101033	Fastening bolt Ø40
21	4	2556145	Linch pin Ø12x50
22	2	24101026	Cylinder bolt
23	4	2483613	Locking nut M16 ElZn DIN 985
24	8	2531078	Washer M16 ElZn DIN 125
25	4	2422500	Hexagon screw M16x80 ElZn 8.8 DIN 931
26	1	24101031	Shaft for spring releaser
27	2	2422485	Hexagon screw M16x30 ElZn 8.8 DIN 933
28	2	2534078	Spring washer M16 ElZn DIN 127
29	2	23521053	Washer Ø17/60x4

002 Mechanism for side wing 90° FUP450

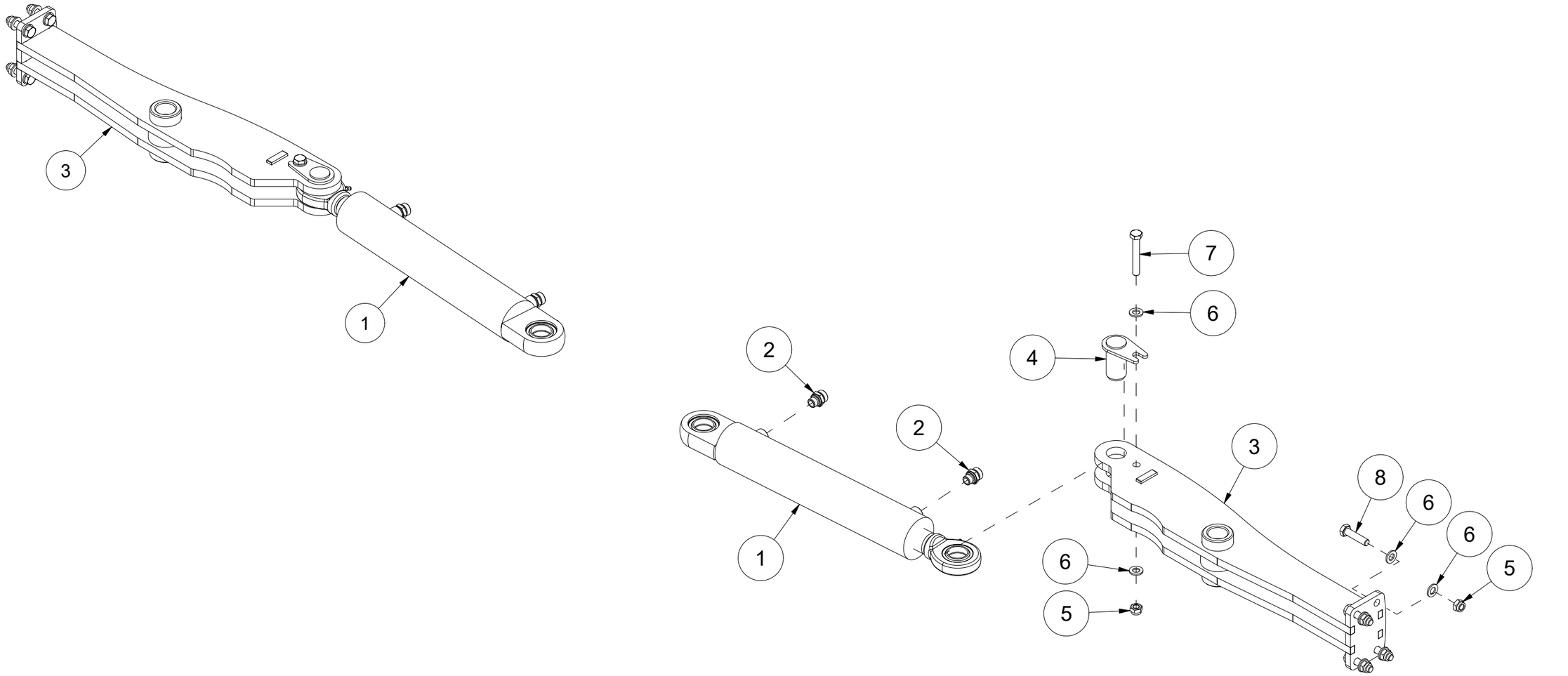

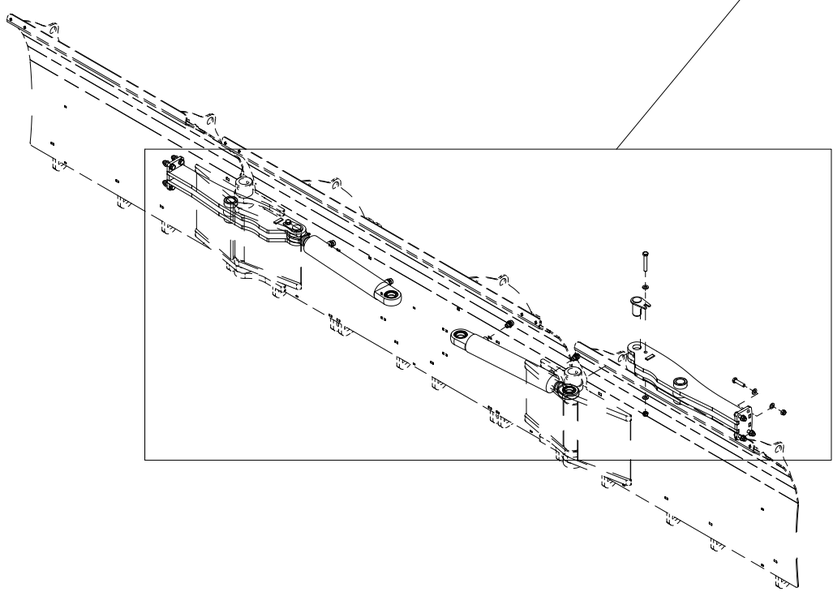

Pos	Qty	Article no	Designation
1	2	2955007	Cylinder 70x40x300 l35l35
2	4	2957750	Hexagon nipple GEK BSP 3/8" L15 ED
3	2	24101050	Side wing bracket
4	2	24101021	Bolt Ø35x65
5	10	2483611	Locking nut M12 ElZn DIN 985
6	20	2531069	Washer M12 ElZn DIN 125
7	2	2422363	Hexagon screw M12x80 ElZn 8.8 DIN 931
8	8	2422356	Hexagon screw M12x50 ElZn 8.8 DIN 931

003 Left side wing FUP450

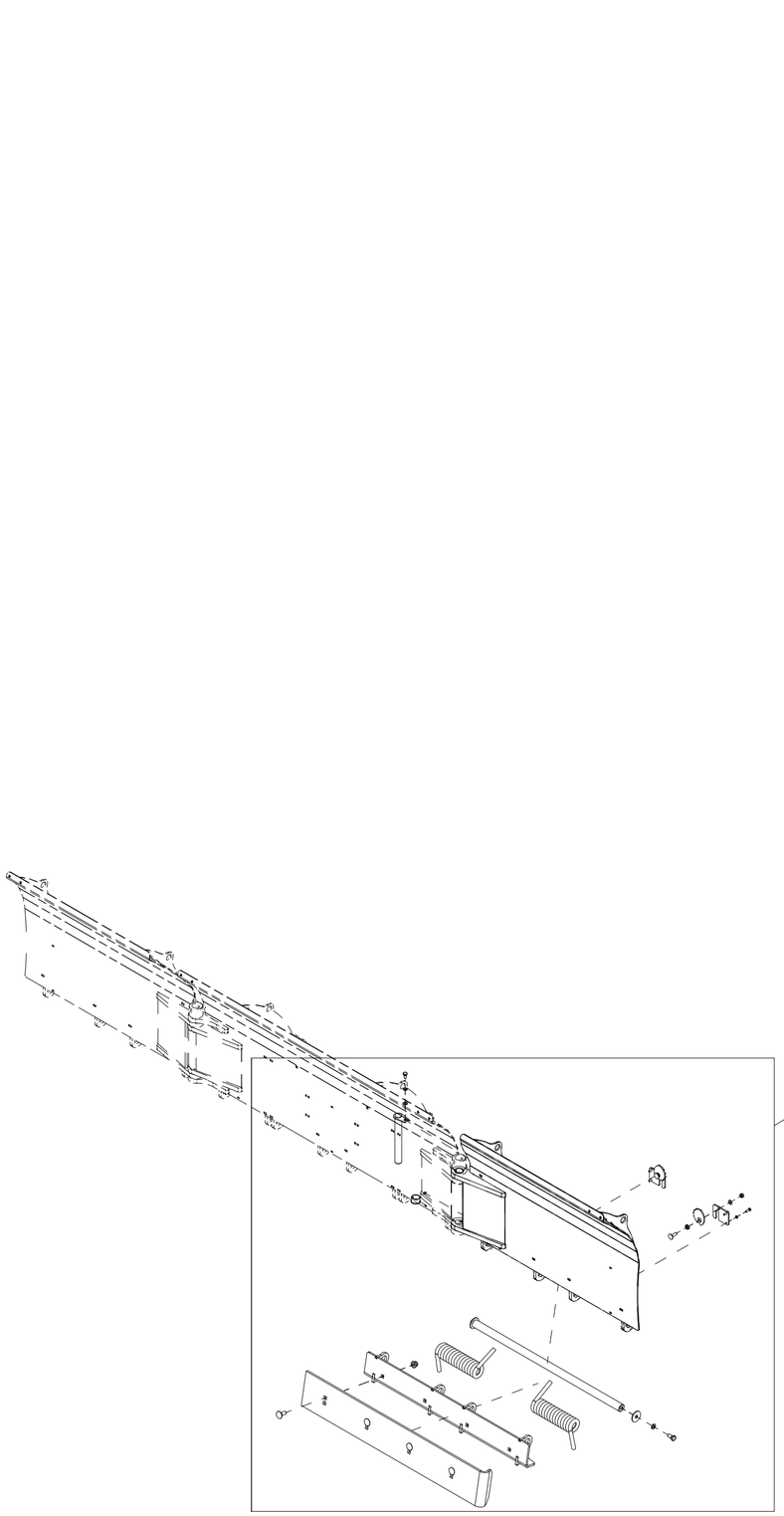

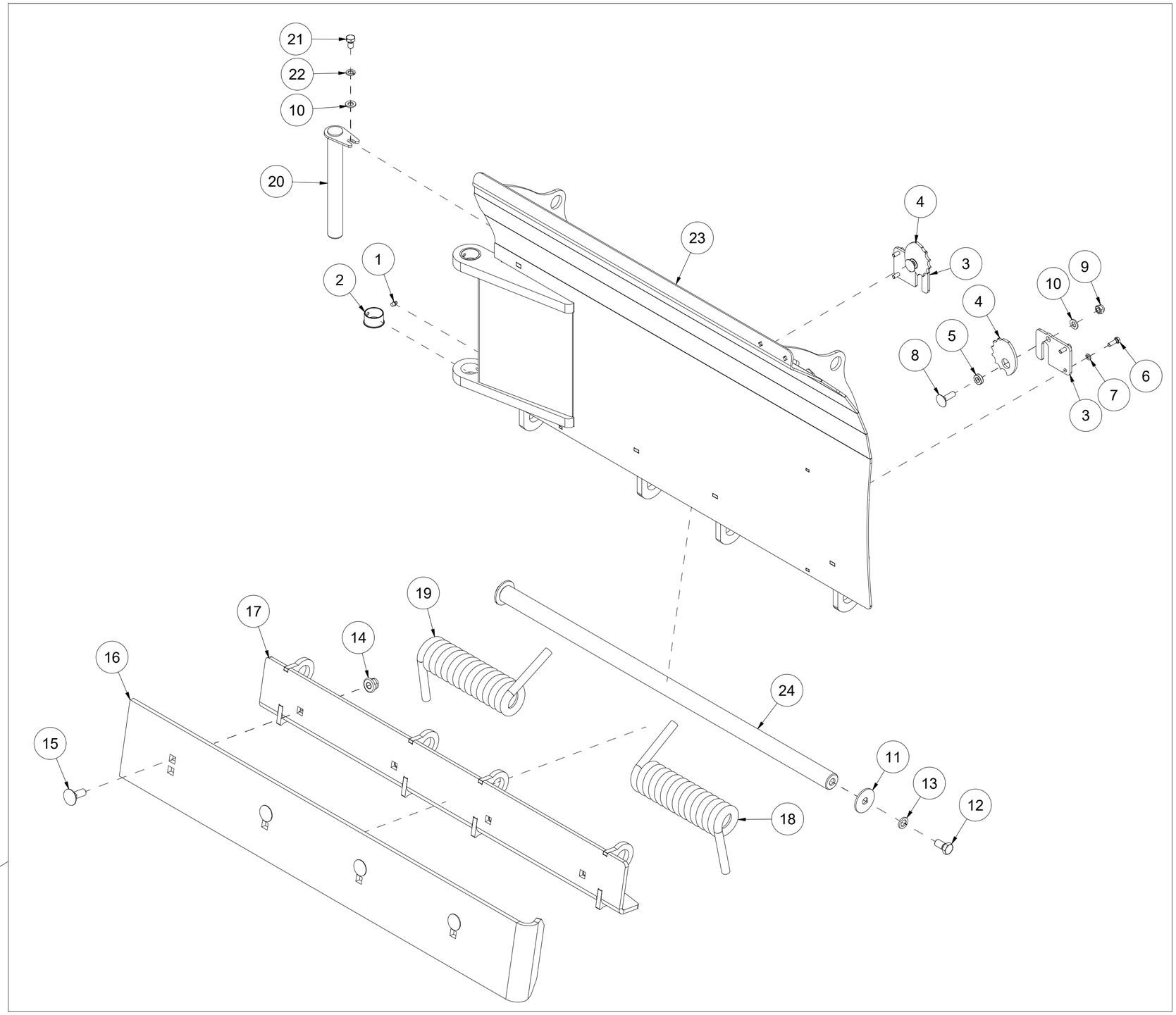

Pos	Qty	Article no	Designation
1	2	2478407	Grease nipple, Straight M8
2	2	2245252	Bushing SF1 Ø40-Ø44-25
3	2	24101027	Lid spring tensioner
4	2	24101028	Spring tensioner
5	2	24101029	Sliding bearing Ø12/24x7
6	4	2422246	Hexagon screw M8x25 ElZn 8.8 DIN 933
7	4	2534047	Spring washer M8 ElZn DIN 127
8	2	2344352	Locking screw M12x40 ElZn 8.8 DIN 603
9	2	2483611	Locking nut M12 ElZn DIN 985
10	3	2531069	Washer M12 ElZn DIN 125
11	2	23521053	Washer Ø17/60x4
12	2	2422485	Hexagon screw M16x30 ElZn 8.8 DIN 933
13	2	2534078	Spring washer M16 ElZn DIN 127
14	4	2489175	Locking nut with flange M16 ElZn DIN 6926
15	4	2343494	Locking screw M16x45 ElZn 8.8 DIN 603
16	1	2112245	Wear steel 12x200x1280 End bend
17	1	24101014	Vike plate edge wing L1166
18	1	24101065	Torsion spring Ø19VV
19	1	24101066	Torsion spring Ø19 HV
20	1	24101054	Bolt Ø35x302
21	1	2422344	Hexagon screw M12x20 ElZn 8.8 DIN 933
22	1	2534069	Spring washer M12 ElZn DIN 127
23	1	24101002	Lateral wing V4F
24	1	24101030	Bolt for trigger 4F

004 Right side wing FUP450

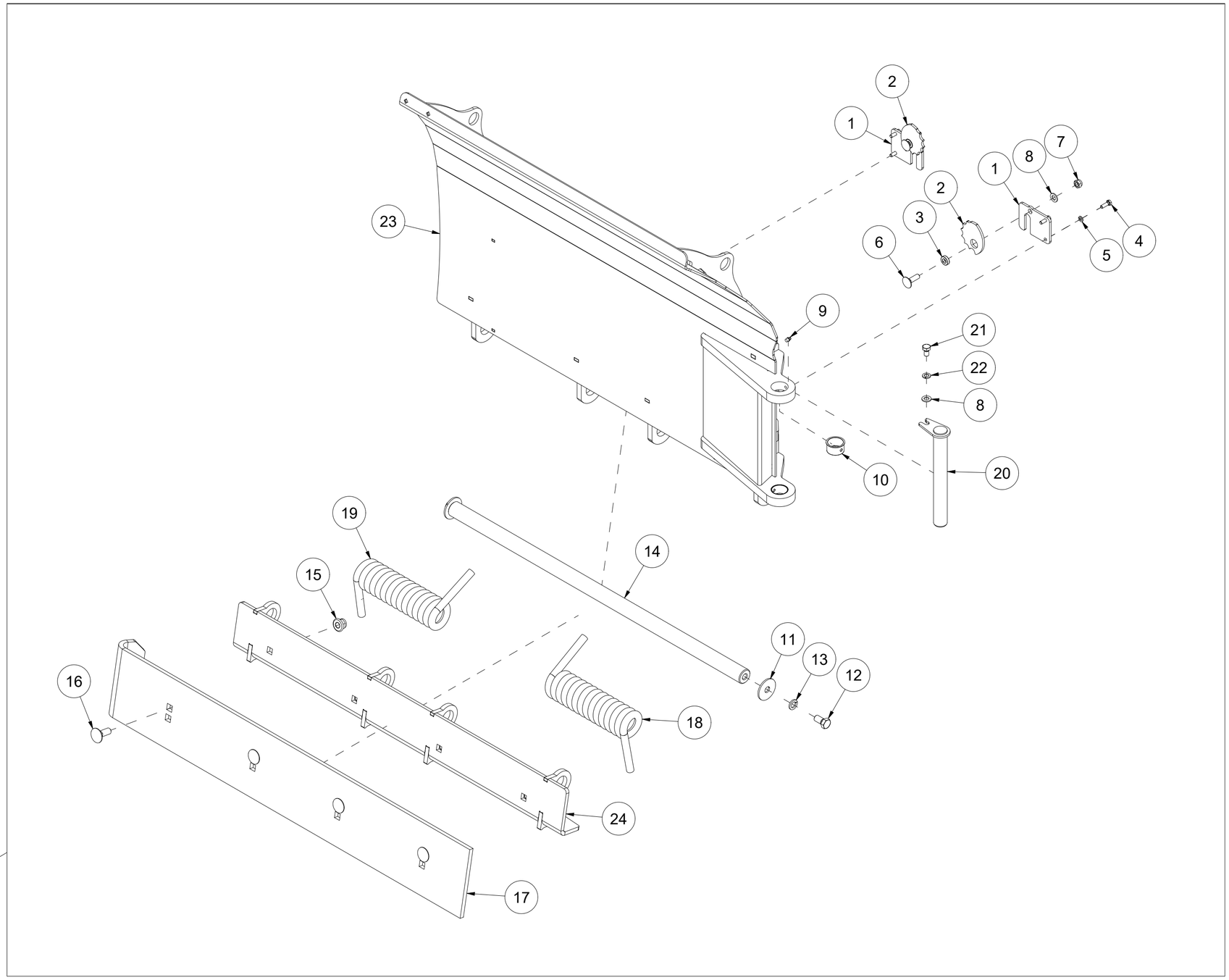

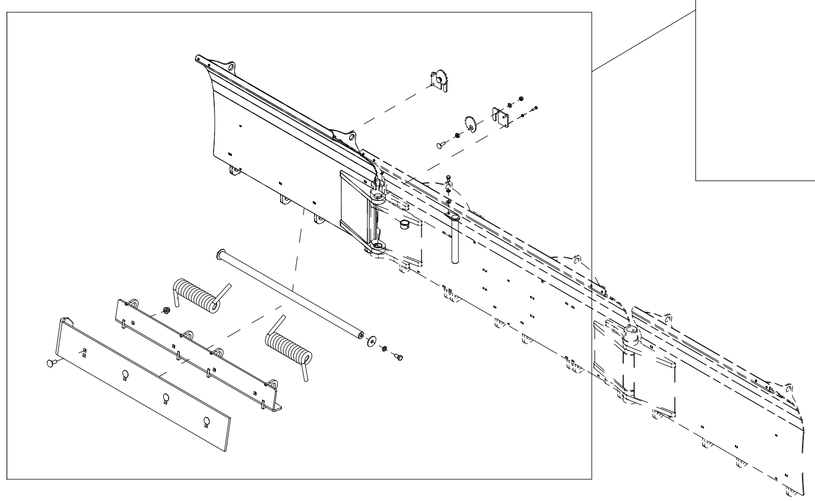

Pos	Qty	Article no	Designation
1	2	24101027	Lid spring tensioner
2	2	24101028	Spring tensioner
3	2	24101029	Sliding bearing Ø12/24x7
4	4	2422246	Hexagon screw M8x25 ElZn 8.8 DIN 933
5	4	2534047	Spring washer M8 ElZn DIN 127
6	2	2344352	Locking screw M12x40 ElZn 8.8 DIN 603
7	2	2483611	Locking nut M12 ElZn DIN 985
8	3	2531069	Washer M12 ElZn DIN 125
9	2	2478407	Grease nipple, Straight M8
10	2	2245252	Bushing SF1 Ø40-Ø44-25
11	2	23521053	Washer Ø17/60x4
12	2	2422485	Hexagon screw M16x30 ElZn 8.8 DIN 933
13	2	2534078	Spring washer M16 ElZn DIN 127
14	1	24101067	Spring trigger shaft Ø40x1050
15	4	2489175	Locking nut with flange M16 ElZn DIN 6926
16	4	2343494	Locking screw M16x45 ElZn 8.8 DIN 603
17	1	2112245	Wear steel 12x200x1280 End bend
18	1	24101065	Torsion spring Ø19VV
19	1	24101066	Torsion spring Ø19 HV
20	1	24101054	Bolt Ø35x302
21	1	2422344	Hexagon screw M12x20 ElZn 8.8 DIN 933
22	1	2534069	Spring washer M12 ElZn DIN 127
23	1	24101003	Lateral wing H4F
24	1	24101005	Wear steel beam V4F

005 Mechanism for side wing 180° FUP450

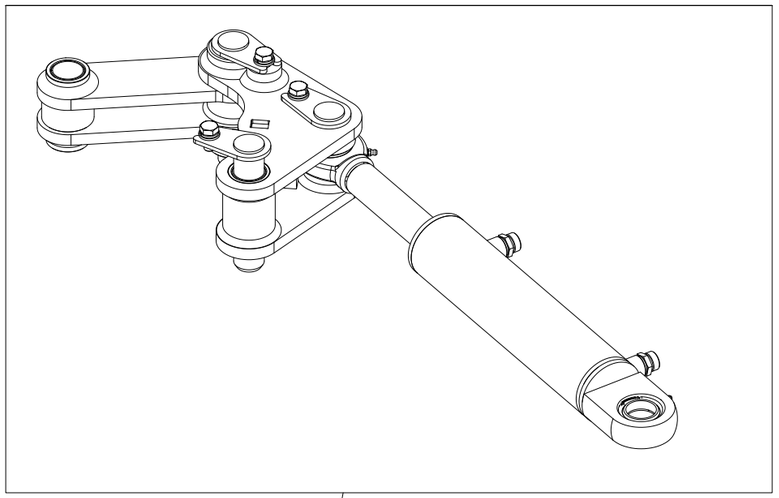

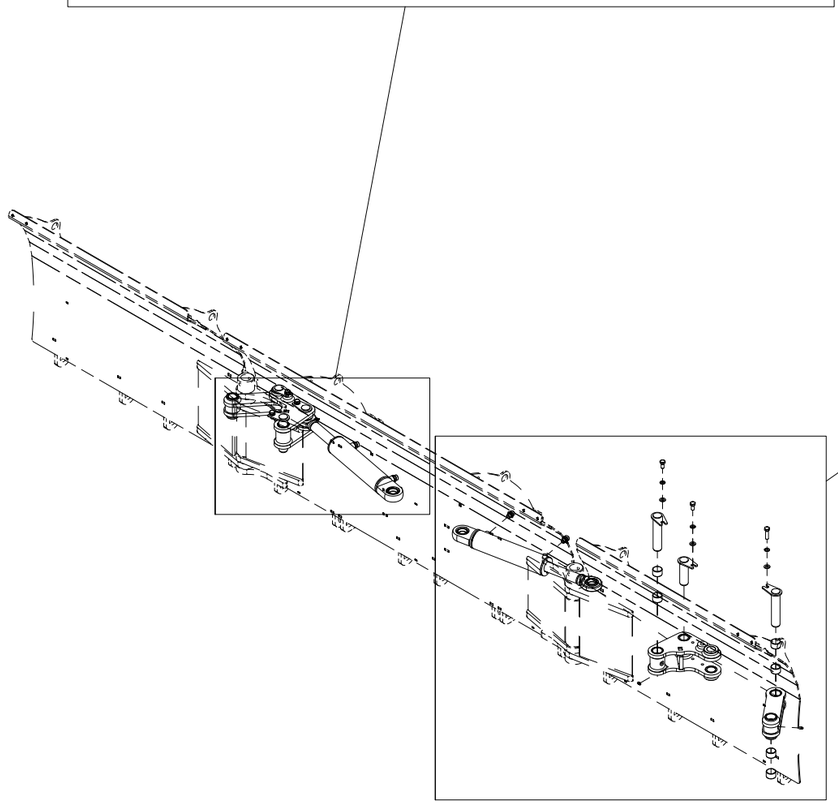

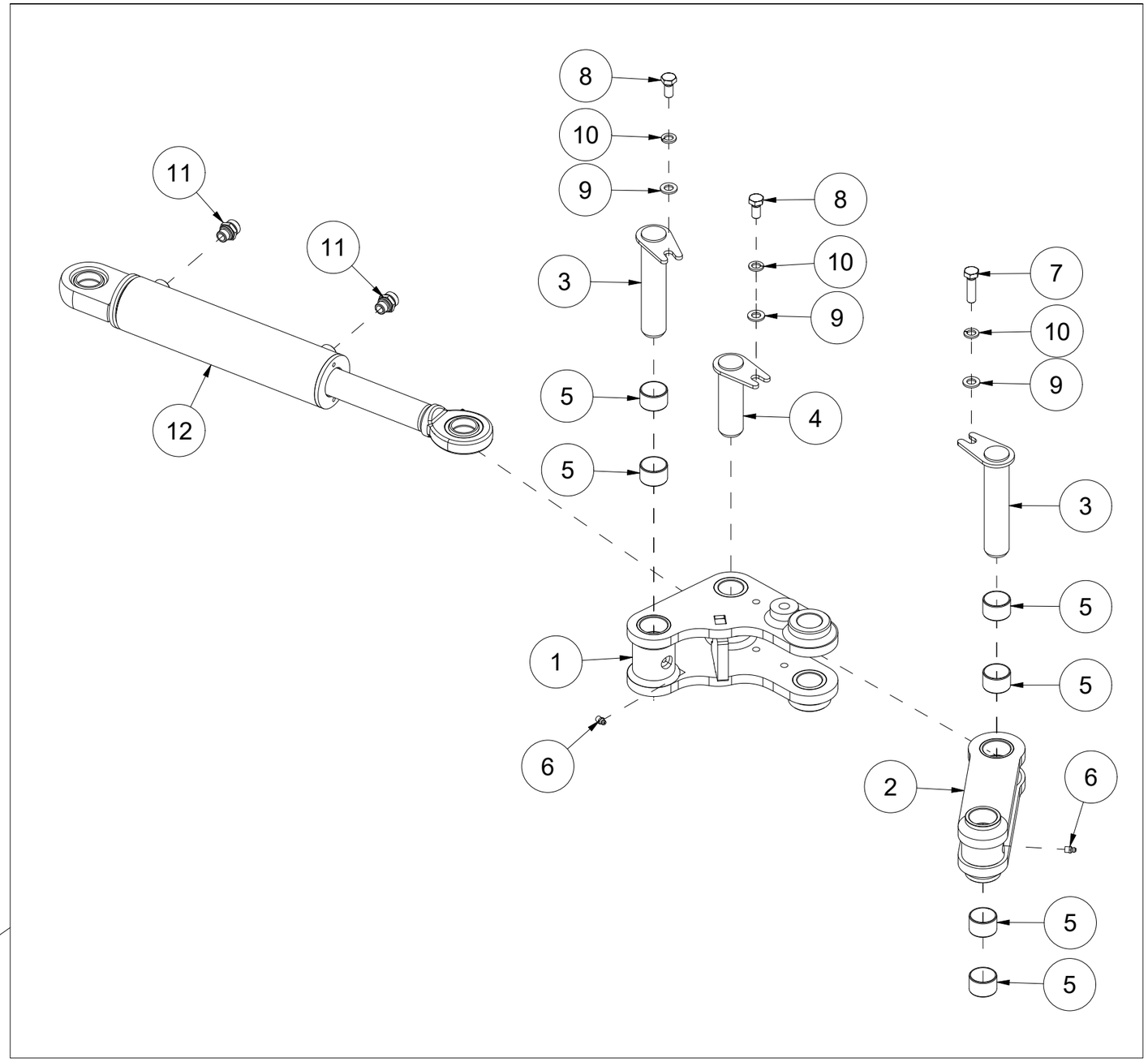

Pos	Qty	Article no	Designation
1	2	24101051	Connection handle
2	2	24101052	Link
3	4	24101053	Bolt Ø35x162
4	2	24101020	Bolt Ø35x112
5	12	2245251	Bushing ZDB P 353925
6	6	2478407	Grease nipple, Straight M8
7	2	2425354	Hexagon screw M12x45 ElZn 8.8 DIN 933
8	4	2422346	Hexagon screw M12x25 ElZn 8.8 DIN 933
9	6	2531069	Washer M12 ElZn DIN 125
10	6	2534069	Spring washer M12 ElZn DIN 127
11	4	2957750	Hexagon nipple GEK BSP 3/8" L15 ED
12	2	2955009	Cylinder 70/40x250 I35I35 L485 RAL9005

006 Accumulators FUP450

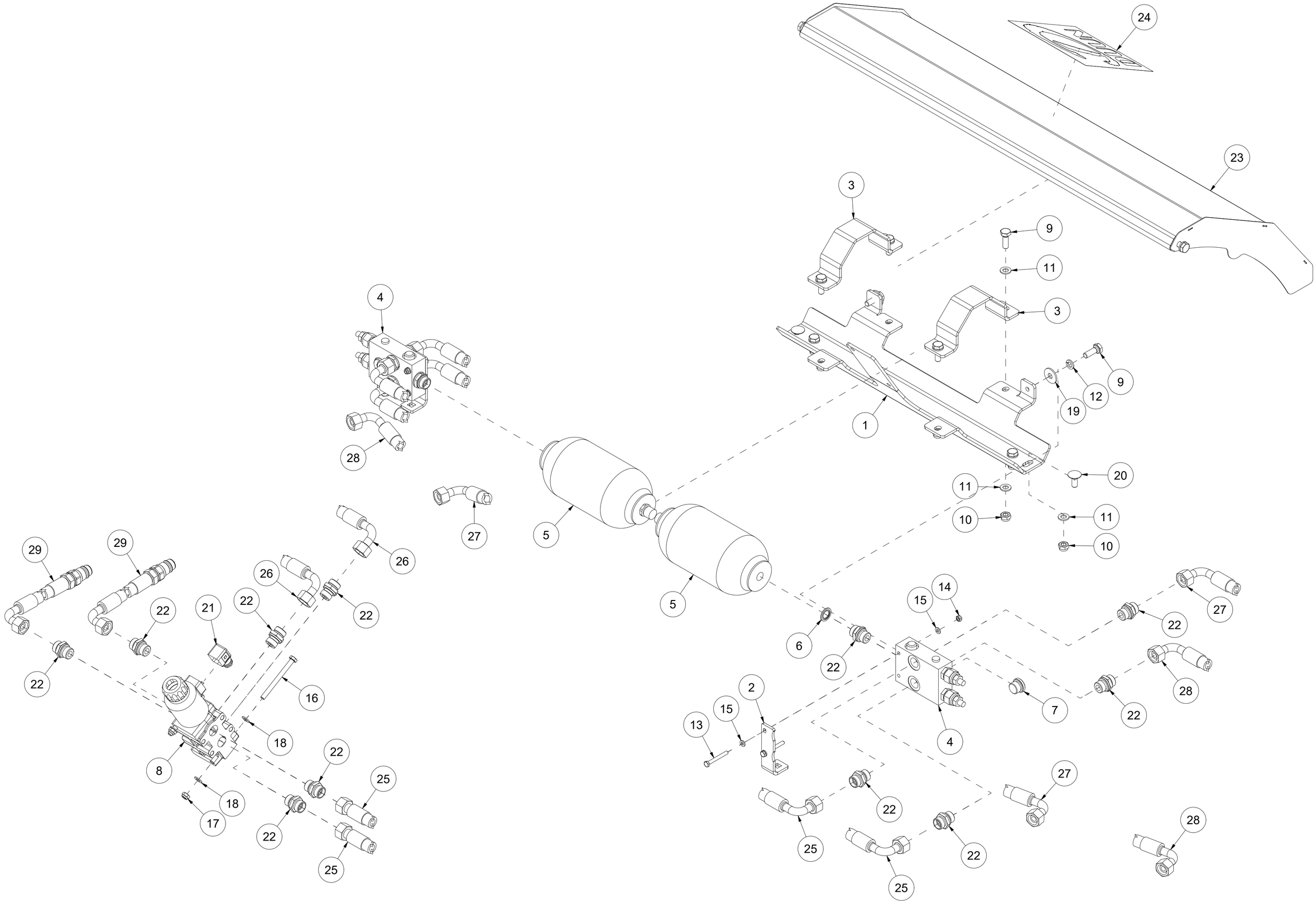

Pos	Qty	Article no	Designation
1	1	24101023	Bracket
2	2	24101024	Bracket
3	2	24101025	Clamps
4	2	2955339	Security guard/alum TS rotation
5	2	2955310	Accumulator 1.4l TS rotation
6	2	2957863	Hydraulic gasket M18
7	2	2957411	Plug 1/2 w/Gasket
8	1	2955239	Selector valve
9	10	2422299	Hexagon screw M10x30 ElZn 8.8 DIN 933
10	10	2483610	Locking nut M10 ElZn DIN 985
11	18	2531060	Washer M10 ElZn DIN 125
12	2	2534060	Spring washer M10 ElZn DIN 127
13	4	2422217	Hexagon screw M6x50 ElZn 8.8 DIN 931
14	4	2483608	Locking nut M6 ElZn DIN 985
15	8	2531039	Washer M6 ElZn DIN 125
16	2	2422265	Hexagon screw M8x90 ElZn 8.8 DIN931
17	2	2483609	Locking nut M8 ElZn DIN 985
18	4	2531047	Washer M8 ElZn DIN 125
19	2	2533060	Body washer M10 ElZn DIN 9021
20	2	2344330	Locking screw M10x25 ElZn 8.8 DIN 603
21	1	2957402	DIN Plug 12/24VV 5,0m LED
22	16	2957768	Hexagon nipple GEK BSP 1/2" L15 ED
23	1	24101036	Cover
24	1	2935151	Adhesive label Duun 200x200
25	2	2958241	Hydraulic hose 1/2" L300
26	2	2958524	Hydraulic hose 1/2" L390
27	2	2958525	Hydraulic hose 1/2" L360
28	2	2958526	Hydraulic hose 1/2" L600
29	2	2958180	Hydraulic hose 1/2" L3250

007 Lights package FUP450

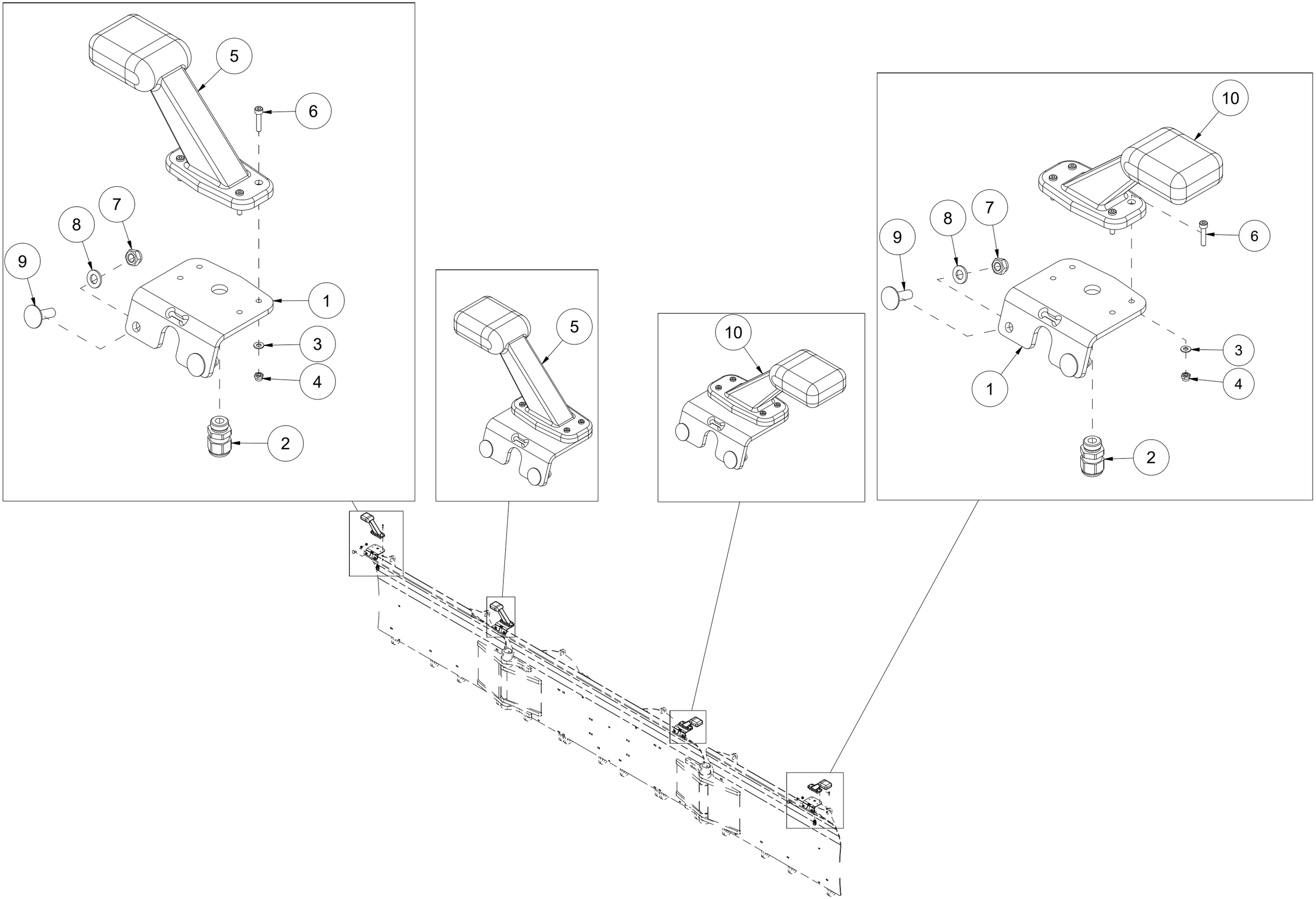

Pos	Qty	Article no	Designation
1	4	24101035	Light bracket
2	4	4127613	Nipple with strain relief M16
3	16	2531023	Washer M4 ElZn DIN 125
4	16	2483606	Locking nut M4 ElZn DIN 985
5	2	4421031	Right horizontal marker light 12V
6	16	2477139	Unbrako cylinder screw M4x20 ElZn DIN 912
7	8	2483609	Locking nut M8 ElZn DIN 985
8	8	2531047	Washer M8 ElZn DIN 125
9	8	2344246	Locking screw M8x25 ElZn 8.8 DIN 603
10	2	4421035	Left horizontal marker light 12V

008 Swivel module FUP450

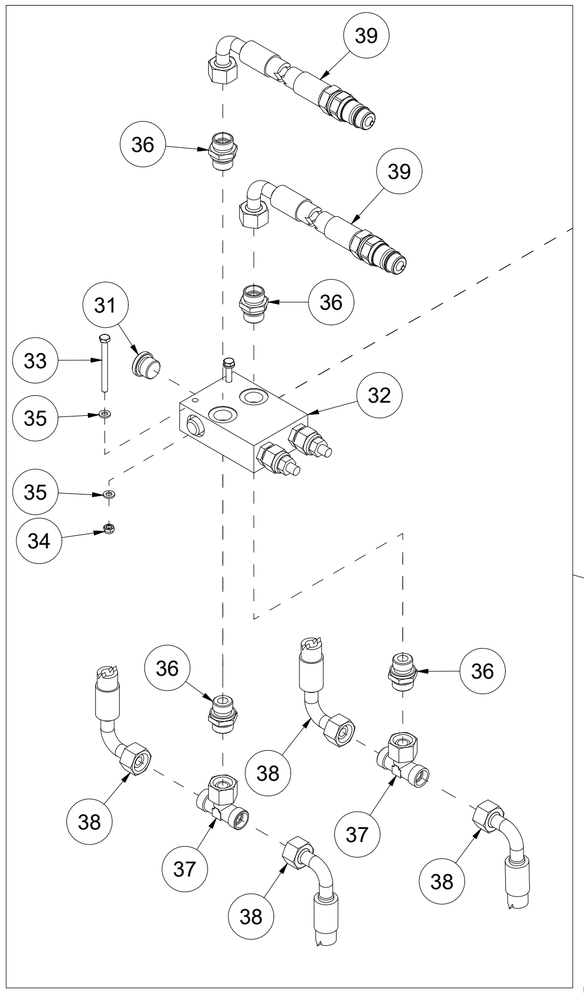

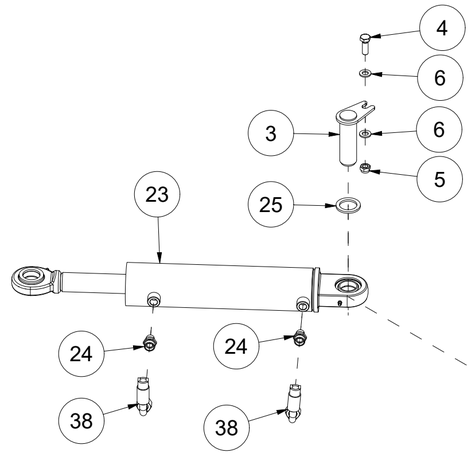

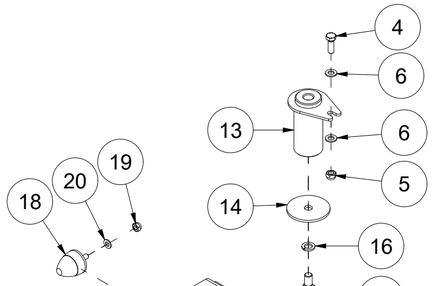

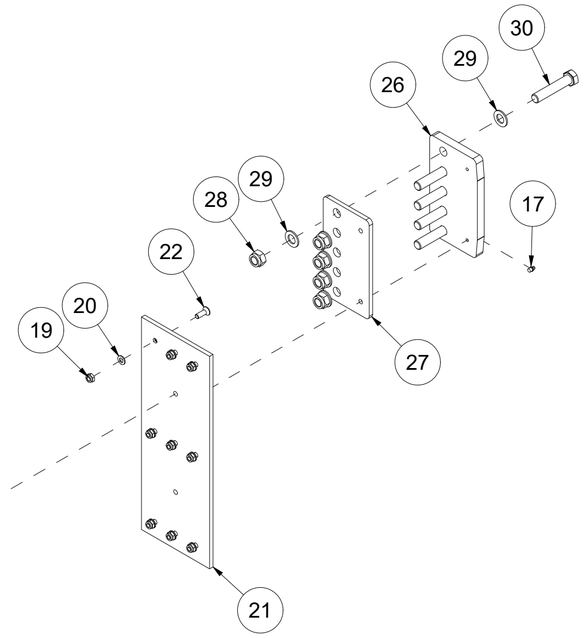

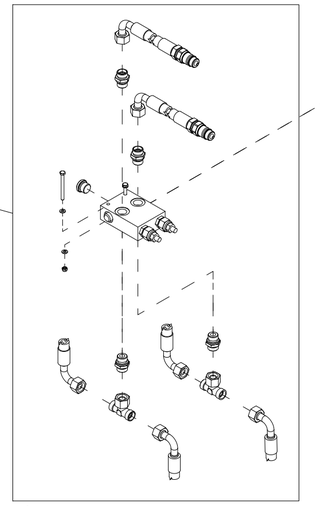

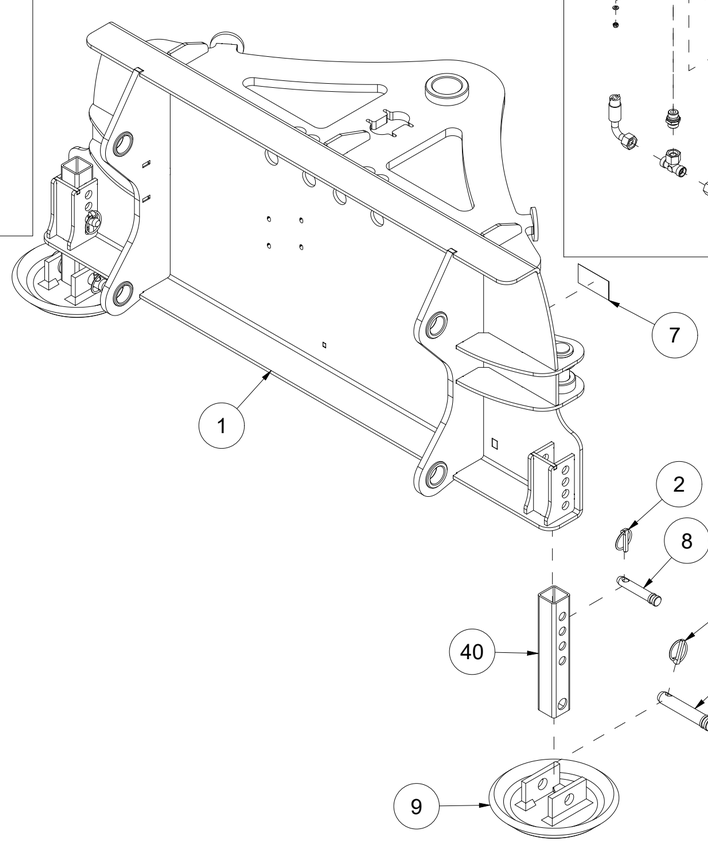

Pos	Qty	Article no	Designation
1	1	24101008	External swing module
2	4	2556142	Linch pin Ø10x40
3	4	24101020	Bolt Ø35x112
4	6	2422350	Hexagon screw M12x35 ElZn 8.8 DIN 933
5	6	2483611	Locking nut M12 ElZn DIN 985
6	12	2531069	Washer M12 ElZn DIN 125
7	2	2935088	Adhesive label 90x48 Hand pinch hazard
8	2	2526321	Top strut bolt cat. 1 Ø19x70
9	2	2112247	Skid pad Ø285
10	4	2533095	Washer Ø26/45x4
11	2	2526326	Top strut bolt cat. 2 Ø25,4x103
12	1	24101009	Internal swing module
13	2	24101056	Bolt Ø60x118
14	2	24101057	Washer Ø17/90x5
15	2	2422485	Hexagon screw M16x30 ElZn 8.8 DIN 933
16	2	2534078	Spring washer M16 ElZn DIN 127
17	8	2478407	Grease nipple, Straight M8
18	4	2225110	Rubber damper 52X58x55Sh
19	22	2483610	Locking nut M10 ElZn DIN 985
20	22	2531060	Washer M10 ElZn DIN 125
21	2	24101049	Sliding rail 200x540x10
22	18	2472299	Unbrako countersunk head screw M10x30 ElZn DIN 7991
23	2	2955008	Cylinder 80x40x250 I35I35
24	4	2957750	Hexagon nipple GEK BSP 3/8" L15 ED
25	8	24101060	Washer Ø36/50,7x4
26	2	24101040	Fastening plate
27	2	24101048	Sliding rail 135x200x10
28	10	2483615	Locking nut M20 ElZn DIN 985
29	20	2531086	Washer M20 ElZn DIN 125
30	10	2422583	Hexagon screw M20x100 ElZn 8.8 DIN 931
31	2	2957411	Plug 1/2 w/Gasket
32	1	2955339	Safety valve /alum TS rotation
33	2	2422221	Hexagon screw M6x65 ElZn 8.8 DIN 931
34	2	2483608	Locking nut M6 ElZn DIN 985
35	4	2531039	Washer M6 ElZn DIN 125
36	4	2957768	Hexagon nipple GEK BSP 1/2" L15 ED
37	2	2957775	T-hexagon nipple EVTK 15L
38	4	2958527	Hydraulic hose 1/2" L800
39	2	2958180	Hydraulic hose 1/2" L3250
40	2	24101041	Bracket

009 Coupling frame FUP450

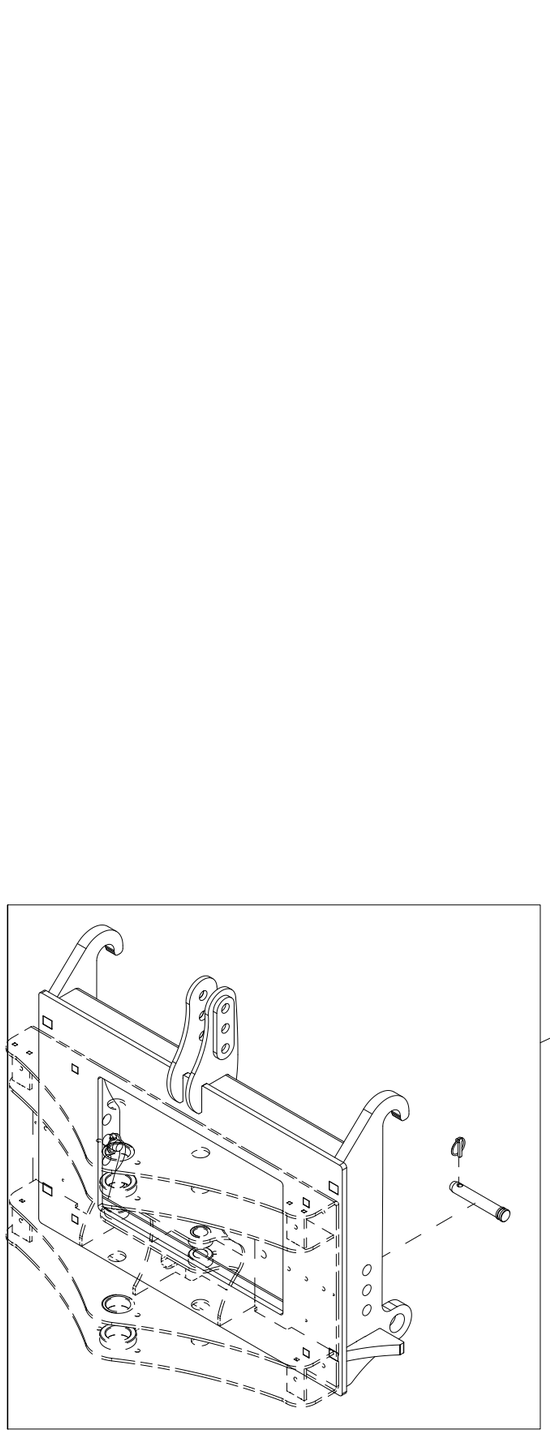

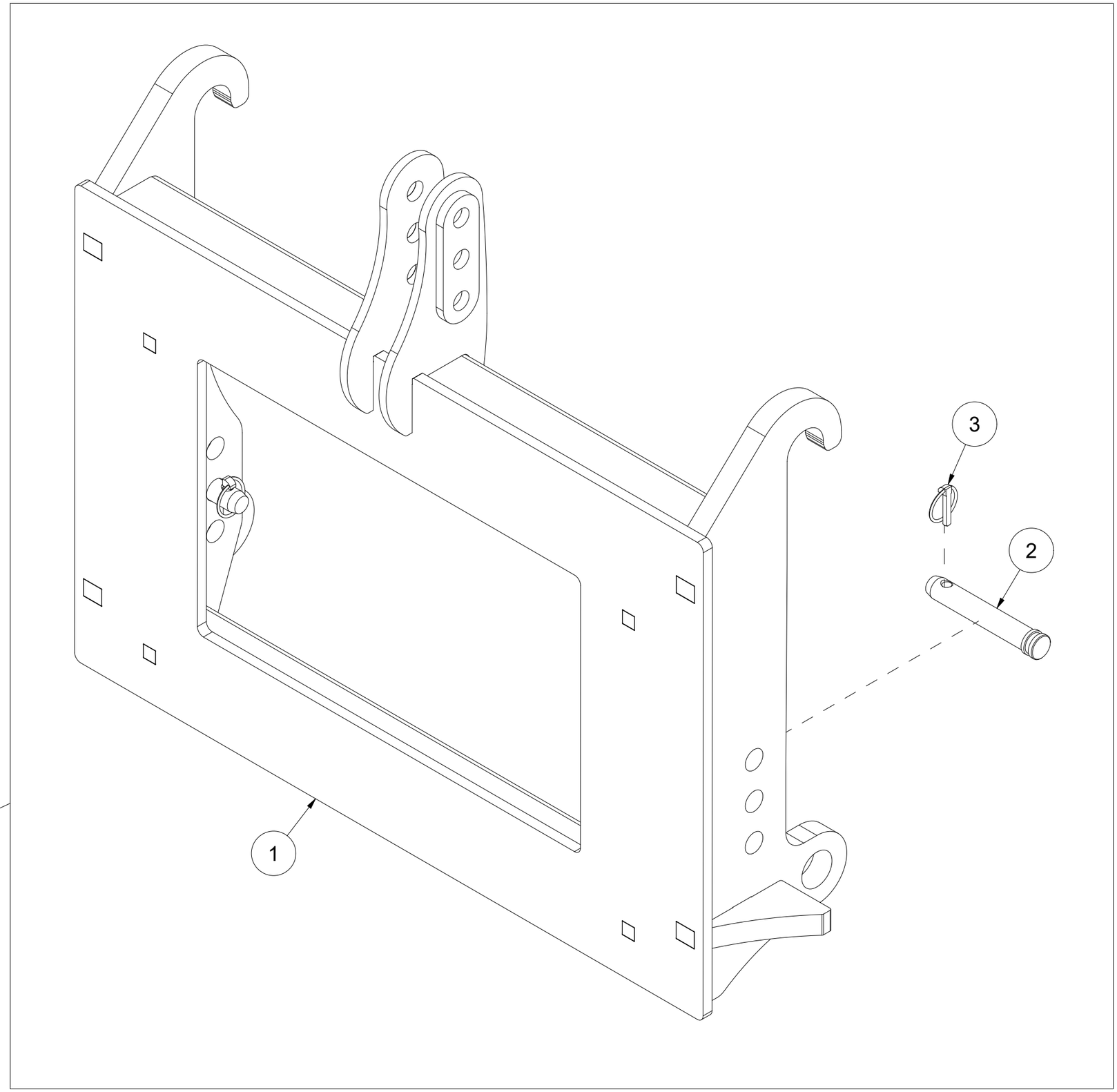

Pos	Qty	Article no	Designation
1	1	24101046	Frame
2	2	2551732	Drawbar bolt cat. 2 Ø28x134
3	2	2556142	Linch pin Ø10x40